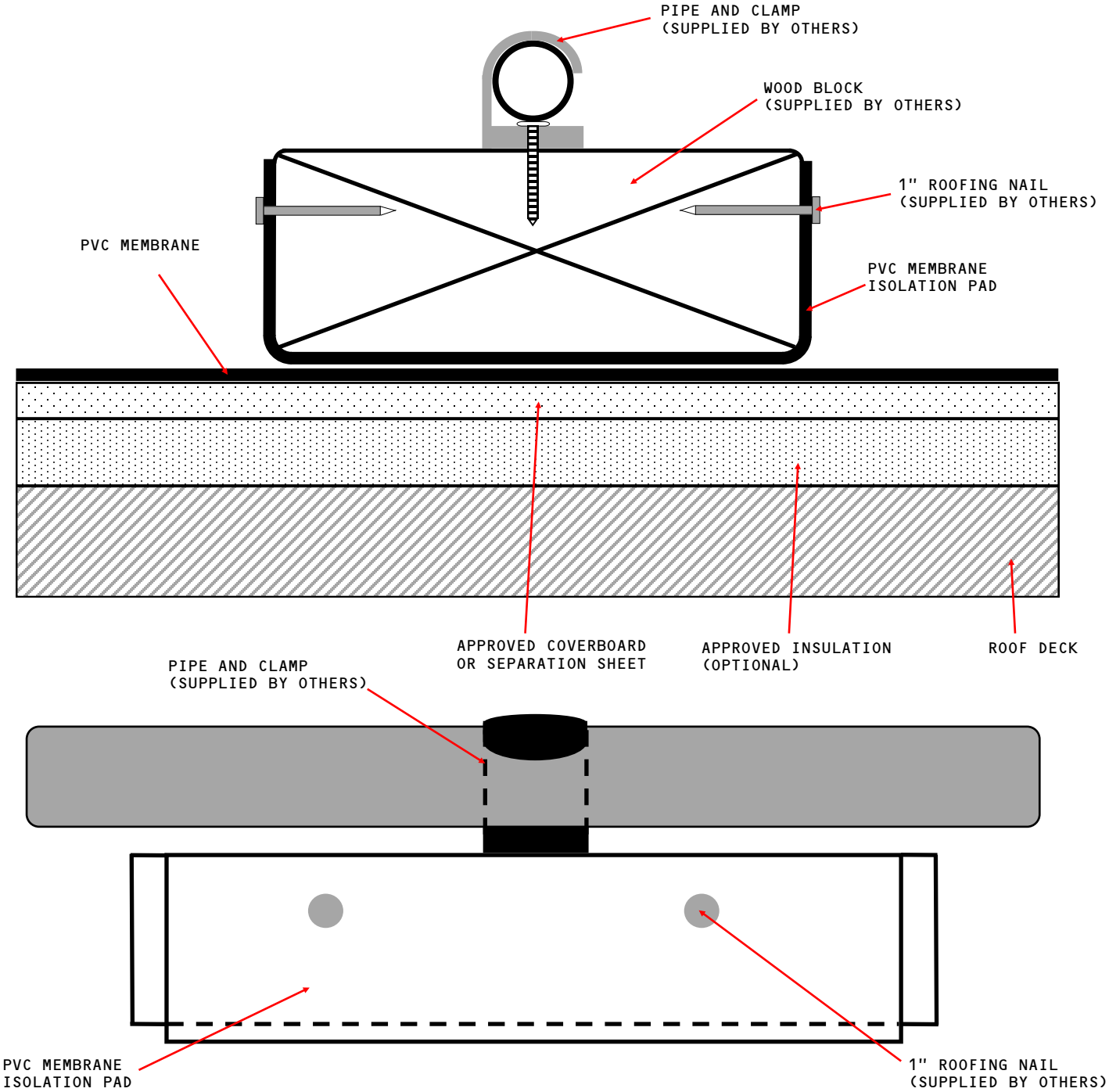Isolation pad
Detail PS-GC 5